Marine heater installation guide

Airtronic D2, D4, D5

Eberspächer

Eberspächer (UK) Ltd.
Headlands Business Park,
Salisbury Road, Ringwood,
Hants BH24 3PB.

Tel: 01425 480151
Fax: 01425 480152

www.eberspacher.com

22278F © Eberspächer 2006.

1 Introduction

Concept of this manual

This manual aims to provide all the necessary information to assist the workshop with the installation of Eberspacher Airtronic D2/D4 and D5 air heaters into marine craft when used in conjunction with the heater's technical description manual.

This manual has been divided into chapters for quick and easy reference as listed below.

Please Note!

Additional information is to be found within the technical description and operating instruction manuals that accompany the heater. If you require information specific to your installation, which is not included in our manuals, please contact Eberspächer.

1 **Introduction**
Provides initial information and advice on using the content of this manual.

2 **Planning the installation**
Information and considerations before starting the installation.

3 **Positioning the heater**
Discusses suitable mounting locations and possibilities.

4 **Air ducting**
The heater rating factors and ducting considerations.

5 **Exhaust and combustion air system**
Advice on routing the exhaust and combustion air, as well as installing the exhaust hull fitting.

6 **Fuel system**
Connections and limitations of the fuel system.

7 **Electrical system**
Information on connecting the heater electrics and positioning of the operating switch.

8 **Operation and function**
Information on using your heating system for the first time.

9 **Warranty**
Information on the Warranty documentation.

1 Introduction

Special text structure, presentation and picture symbols

This manual uses special text structures and picture symbols to emphasise different contents. Please refer to the examples below for the corresponding meanings and associated actions.

Special structure and presentations

A dot (•) indicates a list which is started by a heading. If an indented dash (–) follows a dot, this list is subordinate to the dot.

Picture symbols

§ **Regulation!**

This picture symbol with the remark “Regulation” refers to a statutory regulation. Failure to comply with this regulation results in expiry of the type of permit for the heater and preclusion of any Guarantee and liability claims on J. Eberspächer GmbH & Co. KG and its associated companies.

Danger!

This picture symbol with the remark “Danger!” refers to the risk of a fatal danger to life and limb. Failure to comply with these instructions can result in severe injuries under certain circumstances.

Caution!

This picture symbol with the remark “Caution!” refers to a dangerous situation for a person and/or the product. Failure to comply with these instructions can result in injury to people and/or damage to machinery.

Please Note!

These remarks contain application recommendations and useful tips for installation of the heater.

Important information before starting work

Range of application of the heater
The air heater operating independently of an engine is intended for installation in the following vehicles, depending on its heating output:
- Vehicles of all kinds (max 9 seats)
- Construction machinery
- Agricultural machinery
- Boats, ships and yachts (only diesel heaters)
- Camper vans

Please Note!

- The camper heaters are intended for installation in camper vans. Version D3-Camper should be used in situations requiring reduced noise levels.
- The heaters (only diesel heaters, 24 volt) can be installed in vehicles used for the transport of dangerous goods as per ADR / ADR99.
- The current controller is to be replaced by a special controller when the heater is to be used to heat the freight compartment / cargo (order no. see heater price list or spare parts list).

Purpose of the heater
(using the vehicle heat exchanger)
- Pre-heating, de-misting windows
- Heating and keeping the following warm:
  - Driver and working cabs, Ship’s cabins
  - Freight compartments
  - Passenger and crew compartments
  - Vehicle engines and units
  - Camper vans

On account of its functional purpose, the heater is not permitted for the following applications:
- Long-term continuous operation, e.g. for preheating and heating of:
  - Residential rooms
  - Garages
  - Work huts, weekend homes and hunting huts
  - Houseboats, etc.
- Heating or drying
  - Living creatures (people or animals) by blowing hot air directly at the subject
  - Objects
  - Blowing hot air into containers

Caution!

Safety instructions for application and proper purpose!
- The heater must only be used and operated for the range of application stated by the manufacturer in compliance with the “Operating instructions” included with every heater.

Statutory regulations

The Federal Road Transport Directorate has issued an “EC type approval” and an “EMC type approval” for the heater for installation in motor vehicles and with the following official type approval marks, noted on the heater name plate.

AIRTRONIC	EC- e1 00 0025
	EMC- e1 02 1516
AIRTRONIC M	EC- e1 00 0026
	EMC- e1 02 1653

§ **Regulation!**

Directive 2001 / 56 / EU of the European Parliament and the Council!

- **Arrangement of the heater**

– Parts of the structure and other components near the heater must be protected from excess heat exposure and possible contamination from fuel or oil.

– The heater must not pose a fire hazard even when it overheats.

  This requirement is deemed to be fulfilled when adequate clearance to all parts is observed during installation, sufficient ventilation is provided and fire-proof materials or heat plates are used.

– The heater must not be mounted in the passenger compartment of vehicles in class M_2 and M_3.
  But a heater in a hermetically sealed enclosure which otherwise complies with the conditions stated above may be used.

– The factory nameplate or duplicate must be affixed so that it can still be easily read when the heater is installed in the vehicle.

– All appropriate precautions must be taken when arranging the heater to minimise the risk of injuries to persons or damage to other property.

- **Operating status display**

– A clearly visible operating display in the user’s field of vision must indicate when the heater is switched on and off.

- **Fuel supply**

– The fuel intake connection must not be located in the passenger compartment and must be sealed with a properly closing lid to prevent any fuel leaks.

– In heaters for liquid fuel where the heater fuel is separate from the vehicle fuel, the type of fuel and intake connection must be clearly identified.

– A warning sign is to be fixed to the intake connection indicating that the heater must be switched off before refuelling.

- **Exhaust system**

– The exhaust outlet must be arranged so as to prevent any penetration of exhaust fumes into the vehicle interior through the ventilation system, warm air intakes or open windows.

- **Combustion air intake**

– The air for the heater combustion chamber must not be sucked in from the passenger compartment of the vehicle.

– The air intake must be arranged or protected in such a way that it cannot be blocked by other objects.

- **Heater air intake**

– The heater air supply must consist of fresh air or circulated air and be sucked in from a clean area not contaminated by exhaust fumes of the drive machine, the combustion heater or any other source in the vehicle.

– The intake pipe must be protected by a grid or other suitable means.

- **Hot air outlet**

– The hot air pipes within the vehicle must be arranged or protected in such a way that there is no risk of injury or damage if they are touched.

– The air outlet must be arranged or protected in such a way that it cannot be blocked by any objects.

1 Introduction

Statutory regulations

§ **Regulation!**

Mounting the heater in a vehicle for the transport of dangerous goods as per ADR / ADR99!

- When the heater is to be installed in vehicles for the transport of dangerous goods, the regulations of ADR / ADR99 must also be observed.

Please Note!

- Compliance with the statutory regulations and safety instructions is prerequisite for guarantee and liability claims.

  Failure to comply with the statutory regulations and safety instructions and incorrect repairs even when using original spare parts make the guarantee null and void and preclude any liability for J. Eberspächer GmbH & Co. KG and its associated companies.

- Detailed information about the regulations of ADR / ADR99 are contained in the information leaflet no. 25 2161 95 15 80.

- Subsequent installation of this heater must comply with these installation instructions.

- The statutory regulations are binding and must also be observed in countries which do not have any special regulations.

- When the heater is to be installed in vehicles not subject to the German Ordinance for the Registration of Motor Vehicles (StVZO), for example ships, the specially valid regulations and installation instructions for these special applications must be observed.

- Installation of the heater in special vehicles must comply with the regulations applying to such vehicles.

- Other installation requirements are contained in the corresponding sections of this manual.

Safety instructions for installation and operation

Danger!

Risk of injury, fire and poisoning!

- The heater must only be started up when the maintenance flap is closed and the outlet hood is mounted in position.

- The maintenance flap must not be opened during operation.

- Disconnect the vehicle battery before commencing any kind of work.

- Before working on the heater, switch the heater off and let all hot parts cool down.

- The heater must not be operated in closed rooms, e.g. in the garage or in a multi-storey car park.

- Adjustable hot air outlets must always be adjusted so that they cannot blow hot air directly at living creatures (people, animals) or objects sensitive to temperature (loose and/or fastened).

Caution!

Safety instructions for installation and operation!

- The year of initial commissioning must be marked on the nameplate.

- The heat exchanger of air heaters is a component subject to high thermal loads which must be replaced 10 years after initial commissioning of the heater. In addition, the installation date must be entered on the plate “original spare part” enclosed with the heat exchanger must. Then affix the plate next to the nameplate on the heater.

- The heater must only be installed either by an authorised Eberspächer partner or by an individual who has been authorised by them. Failure on the installers part to follow the installation instructions and any special advice contained therein will lead to all liability being refused by Eberspächer GmbH & Co. KG and its associated companies.

- Only the control elements approved by Eberspächer must be used to operate the heater. The use of other control elements can cause malfunctions.

Safety instructions for installation and operation

Caution!

Safety instructions for installation and operation!

- Repairs by unauthorised third-parties or with not original spare parts are dangerous and therefore not allowed. They result in expiry of the type permit of the heater; consequently, when installed in motor vehicles they can cause expiry of the vehicle operating licence.

- The following measures are not allowed:
  – Changes to components relevant to the heater.
  – Use of third-party components not approved by Eberspächer.
  – Nonconformities in installation or operation from the statutory regulations, safety instructions or specifications relevant to safe operation as stated in the installation instructions and operating instructions. This applies in particular to the electrical wiring, fuel supply, combustion air system and exhaust system.

- Only original accessories and original spare parts must be used during installation or repairs.

- When carrying out electric welding on the vehicle, the plus pole cable at the battery should be disconnected and placed at ground to protect the controller.

- The heater must not be operated where there is a risk of an accumulation of flammable vapours or dust, for example close to:
  – fuel depot
  – coal depot
  – wood depot
  – grain depots etc.

- The heater must be switched off when refuelling.

- When the heater is mounted in a safety housing etc., the installation compartment of the heater is not a stowage compartment and must be kept clear.
  In particular fuel canisters, oil cans, spray cans, gas cartridges, fire extinguishers, cleaning rags, items of clothing, paper etc. must not be stored or transported on or next to the heater.

- Defect fuses must only be replaced by fuses with the prescribed rating.

- If fuel leaks from the heater fuel system, arrange for the damage to be repaired immediately by a JE service partner.

- After-running of the heater must not be interrupted prematurely e.g. by pressing the battery disconnecting switch, apart from in the case of an emergency stop.

The fitting of a diesel heater in a petrol engine boat is permitted with the following provisos:

- The heater must not be mounted in the engine compartment.

- RCD 94/25EC or ISO 100088:2001 are followed.

- The combustion air pipe must be taken from a vented to atmosphere area.

- The exhaust system must be routed as recommended in our Marine Installation Manual (Section 5).

- Heating intake air must be taken from a clean dry environment.

Accident prevention

General accident prevention regulations and the corresponding workshop and operation safety instructions are to be observed.

1 Introduction

Please read carefully the following instructions, these have been compiled to assist you with every aspect of installing your heater. Special attention is required to the Safety or Caution areas, which are found at the end of each section.

To ensure maximum performance from your heater and for your own safety, please adhere to the following instructions closely. Be aware that in the unlikely event of a heater failure during the warranty period, that warranty may be rejected if the heater is not installed in accordance with these instructions.

Additional operational, technical and safety information, specific to the model of heater you are installing, is provided in the heater technical description and operating instructions manuals that are included within the heater packaging. Please ensure you have this for reference before and during your installation.

When installing the heater, for your own safety, please use all necessary personal protection/safety equipment where required.

2 Planning your installation

Before you begin, we advise that you take some time to plan the installation.

Where and how you install your system will depend on various limitations of both your boat design and construction as well as the technical specification of the heater. Because of this we have endeavoured to give helpful advice within the different sections of this manual, so we advise that each section is read fully before commencing the installation.

As a general guide before you begin, be aware of the location of the boat's fuel and water tanks, the batteries and any cold box, fridge or cooker that may prohibit the routing of the hot air ducting or affect the installation.

Before installing the heater into the boat, ensure that in doing so you are not infringing upon, or contravening any legal requirements of the boat's use or construction. For instance, if the boat is to be used for hire purposes, it may require additional systems or warning labels to be installed, which may not be mentioned in this manual. Similarly, advice from the boat manufacturer may be required if you plan to cut through bulkheads that may be structurally important to the boat design.

Regulations that could affect the installation of the heater may be different in each country/region, so please check.

3 Positioning the heater

The heater should be installed in a dry and protected position and within the permissible mounting planes as shown below. Before deciding on the position, be aware that the location of the exhaust hull fitting and length of the exhaust may limit where you position the heater unit. Refer to the exhaust chapter for further information.
Also you must consider where the heater will draw in the air for heating and its limitations as shown in the ducting chapter of this manual.

Cockpit locker or engine/machinery spaces are ideal installation locations for the heater.

However, the heater must not be installed into any accommodation area.

Ideally, the heater is installed with the exhaust, fuel and combustion air connections pointing vertically downward. Failure to achieve this could affect the optimum performance of the heater, particularly when sailing at an angle. The heater will operate in conditions of permanent 15° angle and after starting to a maximum angle of up to 30°.

Please Note!

When deciding on the position, consideration should also be given for future servicing and access for removal of the heater.

Figure 1

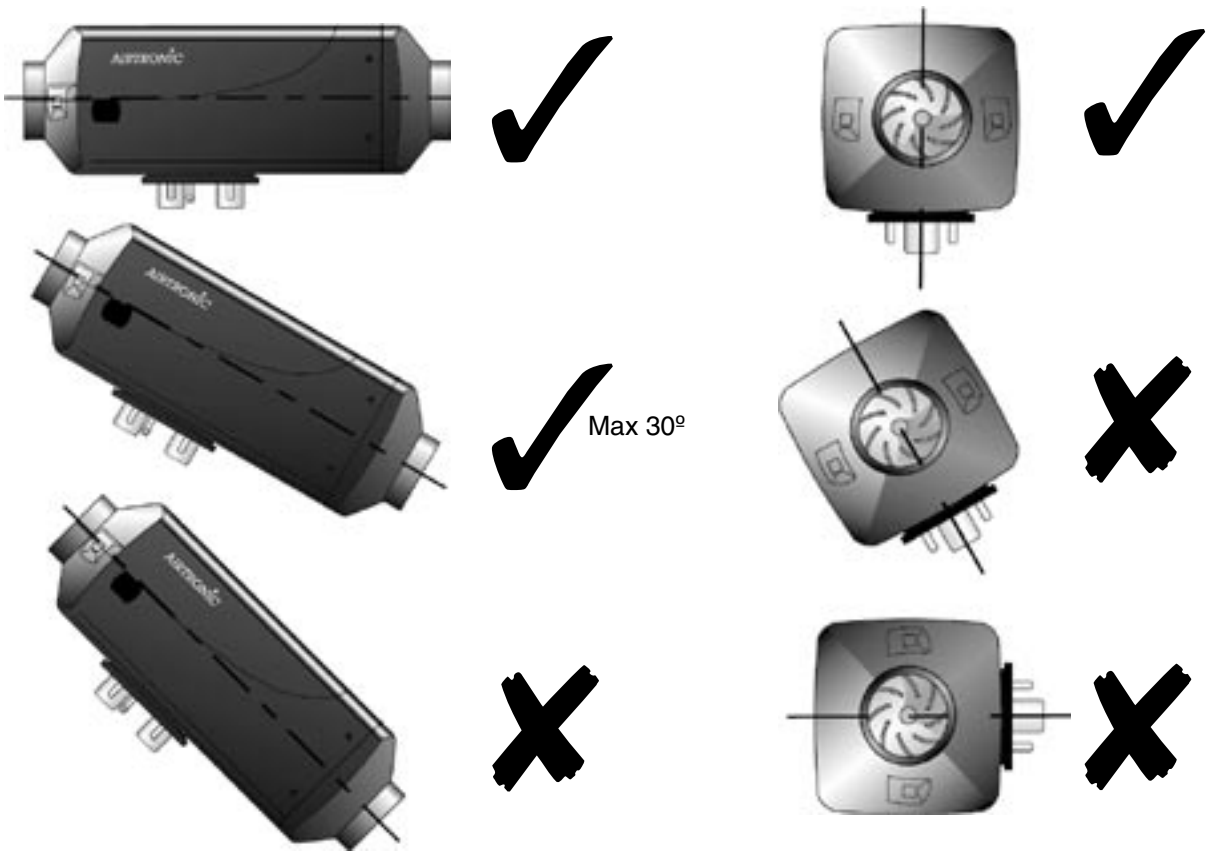

3 Positioning the heater

Attach the heater mounting bracket to a suitable strong bulkhead. Thin bulkheads may need additional support to give the heater a secure mounting. Care should be taken to avoid securing directly onto cabin bulkheads where the possibility of noise or vibration could be transmitted.

Figure 2

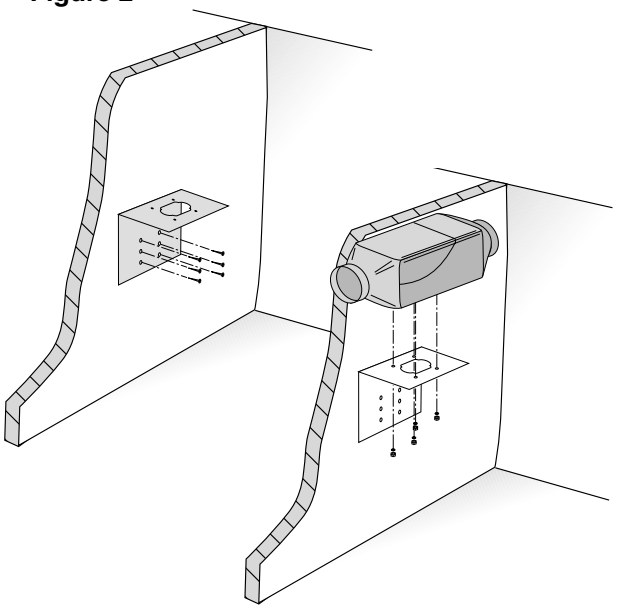

Caution!

Safety Instructions!

- The heater must be located so that aerosol cans, fuel containers or other flammable/combustible materials cannot be stored on, or close to the heater.
- The heater must not be located in a position where it could be damaged or affected by the stowing of any items, or used as a step.

Nameplate

The nameplate is fastened to the front of the heater.

The second nameplate (duplicate) is included in the scope of supply of the heater.

If required, the duplicate nameplate can be adhered in a clearly visible position on the heater or near to the heater.

Figure 3

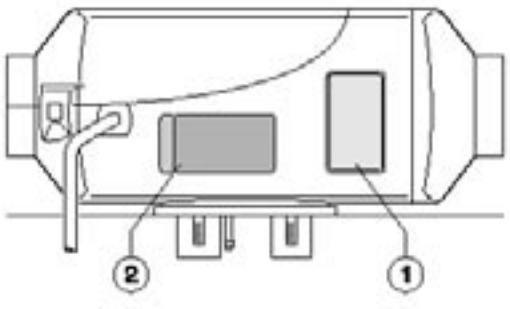

1 Original nameplate.

2 2nd nameplate (duplicate).

4 Air ducting

When installing the inlet and hot air ducts, the ducting system should contain the minimum amount of bends and be as straight as possible. However, on a boat this is rarely achievable. To assist the design of the duct system, and to ensure the heater does not overheat, each heater model has been given a rating factor which must not be exceeded.

To illustrate this, the following is shown below.

Figure 4

Example: Airtronic D4 90mm ducting 2 outlet (Open / Closeable)

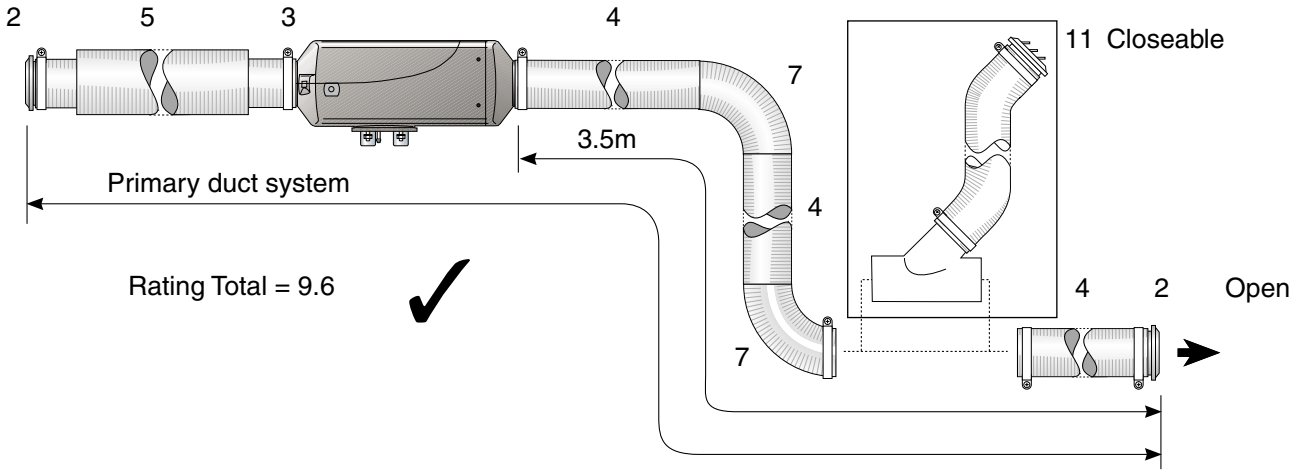

Example: Airtronic D4 90mm ducting 2 outlet (Open / Open)

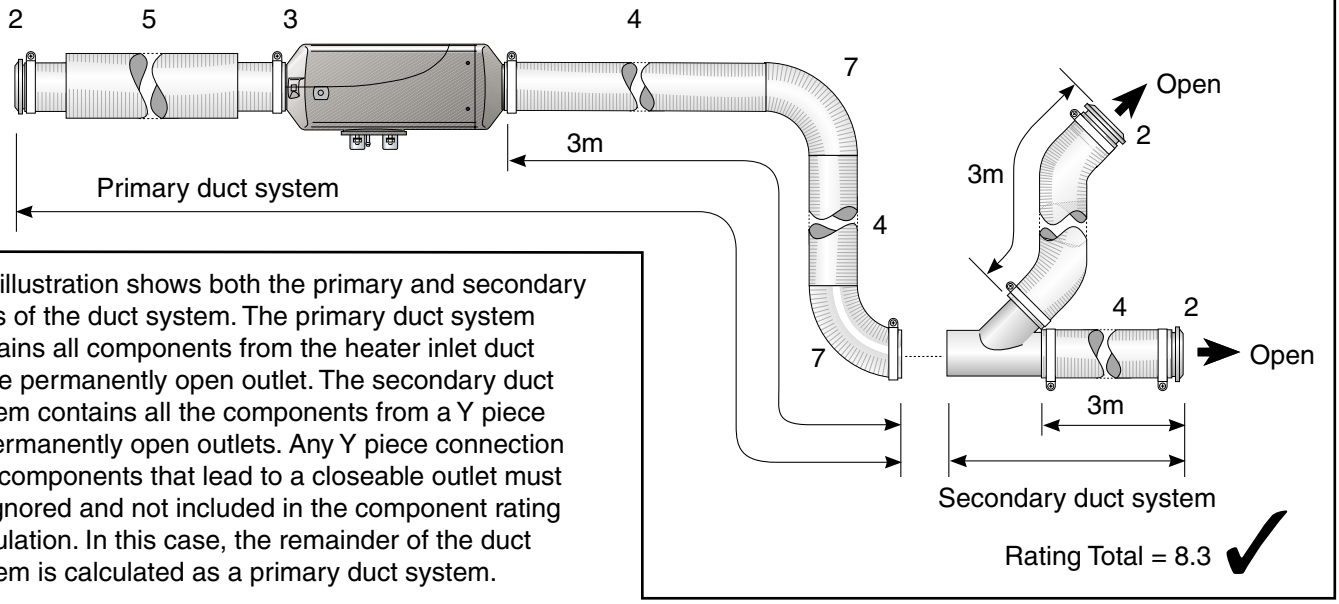

The illustration shows both the primary and secondary parts of the duct system. The primary duct system contains all components from the heater inlet duct to the permanently open outlet. The secondary duct system contains all the components from a Y piece to permanently open outlets. Any Y piece connection and components that lead to a closeable outlet must be ignored and not included in the component rating calculation. In this case, the remainder of the duct system is calculated as a primary duct system.

Figure 5
Heater Components

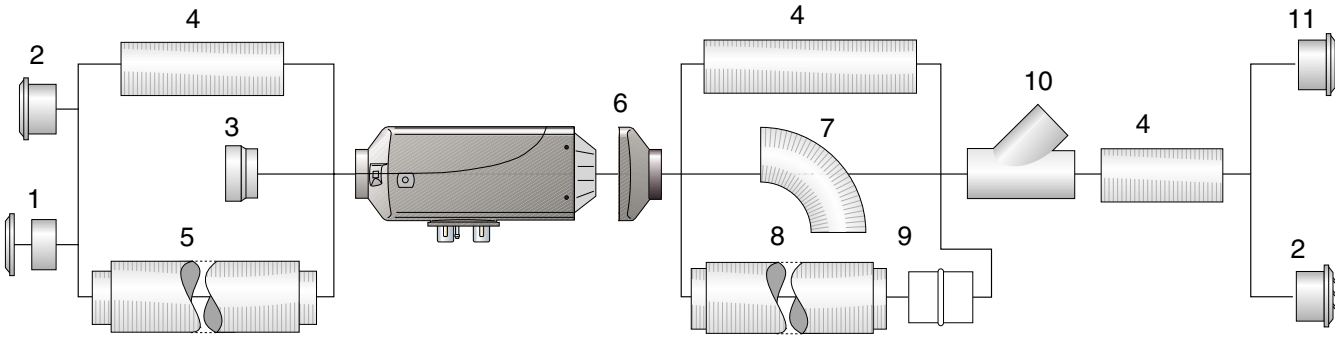

4 Air ducting

The rating factor for each heater model varies depending on the size of the duct that connects directly to the heater reduction hood. In general, a larger duct creates less restriction for the heater and therefore allows a longer duct system to be used. To check if a duct system is permissible, each part of the duct system has been given a component rating which may change depending on its size and the number of permanently open outlets on the system.

Airtronic D2

Maximum heater rating using Ø 60 mm ducting = 6
Maximum heater rating using Ø 75mm ducting = 10

No	Description	Diameter	Primary Duct	Secondary Duct
1	Grill and connector	Ø 60/75mm	1.7	0.6
2	Rotatable outlet	Ø 60/75mm	0.4	0
3	Reduction ring	Ø 60-75mm	-	-
4	Flexible duct, per m	Ø 60/75mm	1.0	0.3
5	Intake silencer	Ø 75mm	0.5	-
6	Reduction hood	Ø 60/75mm	0	0
7	Flexible duct 90˚ bend	Ø 60mm Ø 75mm	1.2 1.2	0.8 0.5
8	Duct Silencer	Ø 75mm	1.0	0
9	Connector	Ø 75mm	0.1	-
10	Y branch	Ø 60mm Ø 75mm	- -	0.3 0.4
11	Closeable outlet		-	-

Airtronic D4

Maximum heater rating using Ø 75 mm ducting = 3
Maximum heater rating using Ø 90mm ducting = 10

No	Description		Primary Duct		Secondary Duct	
			Ø 75mm	Ø 90mm	Ø 75mm	Ø 90mm
1	Grill and connector	Ø 75/ 90mm	1.4	1.4	-	0.5
2	Rotatable outlet	Ø 75mm Ø 90mm	0.6 -	0 2.4	0.5 -	0.3 0.3
3	Reduction ring	Ø 75- 90mm	0	0	0	0
4	Flexible duct, per m	Ø 90mm	0	1.0	0	0
5	Intake silencer	Ø 75mm	1.0	0.8	-	-
6	Reduction hood	Ø 75/ 90mm	0	0	0	0
7	Flexible duct 90˚ bend	Ø 90mm	0	1.0	0	0
8	Duct Silencer	Ø 90mm	0	1.0	0	0
9	Connector		-	-	-	-
10	Y branch	Ø 90mm	-	-	0	0.5
11	Closeable outlet		-	-	-	-

Airtronic D5

Maximum heater rating using Ø 90 mm ducting = 10
Maximum heater rating using Ø 100 mm ducting = 10

No	Description	Diameter	Primary Duct	Secondary Duct
1	Grill and connector		0.5	0.25
2	Rotatable outlet	Ø 90/100mm	3.25	1.0
3	Reduction ring	Ø 90-100mm	0	0
4	Flexible duct, per m	Ø 90mm Ø100mm	1.0 0.5	0.3 0
5	Intake silencer	Ø 90mm Ø 100mm	0.6 0.25	0.3 0
6	Reduction hood	Ø 90mm	-	-
7	Flexible duct 90˚ bend	Ø 90/100mm	0.25	0
8	Duct Silencer	Ø 90mm Ø 100mm	0.6 0.25	0.3 0
9	Connector		-	-
10	Y branch	Ø 90mm Ø 100mm	- -	0.5 0
11	Closeable outlet		-	-

Danger!

Risk of burning and injuries!

- The hot air ducting must be routed and fastened in such a way that there is no risk to people, animals or materials that are sensitive to temperature from radiation/contact or blown hot air.
- If necessary, cover or protect exposed ducting or deflect hot air that poses a potential risk.
- The outflow hood must be fitted on the hot air outflow side.
- High temperatures occur during and after heater operation. Avoid working in the heater vicinity while it is in operation. Switch the heater off and allow it to cool before commencing work. If necessary, wear safety gloves.

Caution!

- The heater air intake must not be positioned in such a way that any exhaust gases can be drawn directly into the heater and its ducting system, under normal circumstances.
- The air intake must be positioned so that the hot air cannot directly re-circulate back into the heater.
- In the event of overheating, possible local air temperatures can reach 150°C and surface temperatures up to 90°C. Use Eberspacher approved temperature resistant ducting only.
- To prevent overheating, one outlet must be permanently open and of sufficient cross-sectional area to allow full heater airflow to pass without restriction.

5 Exhaust and combustion air

Exhaust

The exhaust system included in the kit comprises of an exhaust hull fitting, a flexible twin walled stainless steel exhaust, securing clamps and exhaust support brackets. A silenced exhaust and bend with drain coil are available as an option.

Installing the hull fitting

The position of the exhaust hull fitting will depend on several factors, where you have located the heater, whether your boat is sail or power, and the suitable surfaces available.

On a sailboat, the preferred location is on the transom, as it is normally the area least likely to be affected by seawater when sailing. It is also close to the heater, if it is located in a cockpit locker.

On a motorboat, the transom or side of the hull are suitable locations. However, when locating the hull fitting on the transom of a motorboat, the fitting should be positioned a minimum of 300mm above the waterline to avoid any following seas covering the fitting when the boat slows suddenly.

Attaching the exhaust

To avoid water ingress, the exhaust should be installed and routed as illustrated below.

Use the exhaust support brackets provided to secure the exhaust and keep it away from heat sensitive materials. Attach the condensate drain coil to the exhaust elbow and using the drain tube supplied route the tube into a suitable bilge area.

Please Note!

Small arrows indicating the direction of flow have been cast into the fittings to differentiate between the combustion air and the exhaust fittings at the heater.

Caution!

Safety instructions!

Although the supplied exhaust is insulated, it will get hot during and immediately after heater operation. To avoid potential safety issues the exhaust system must be installed according to these instructions.

- The exhaust hull fitting must not be fitted to a deck or horizontal surface.
- Under no circumstances connect the heater exhaust to an engine exhaust or any other exhaust system.
- The exhaust outlet must vent directly to atmosphere.
- Adequate clearance must be kept around the exhaust system to prevent interference with important functional parts of the boat, e.g. steering or throttle cables.
- Route the flexible exhaust giving clearance and consideration to heat sensitive components such as fuel lines, electrical cables, etc.
- Ensure the support brackets supplied are used to secure the exhaust and avoid damage by vibration.
- Position the hull fitting so that either the heater combustion air or other inlets cannot draw in exhaust fumes.
- Ensure that the position of the hull fitting allows fumes to exit freely and not affect nearby surfaces, e.g. fenders, ropes or mouldings.
- To avoid water ingress, the hull fitting must be at least 300mm above the waterline and a suitable bend formed in the exhaust to prevent water collecting in the exhaust.

Figure 6

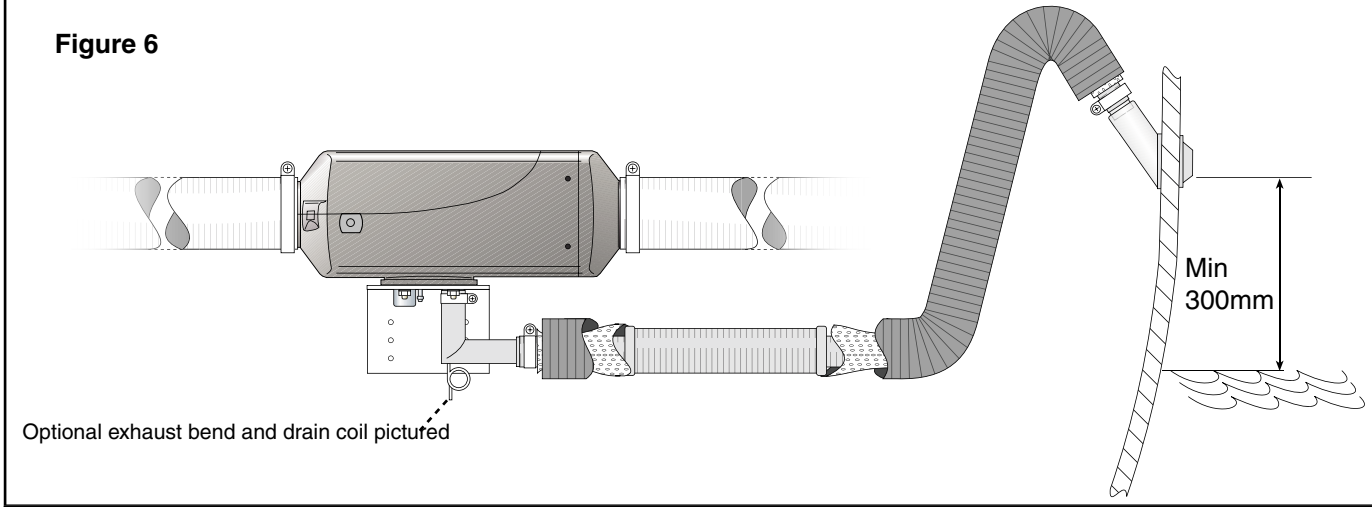

5 Exhaust and combustion air

Danger!

Risk of injury and burns!

All combustion processes produce high temperature and toxic exhaust fumes. This is the reason why the exhaust system must be installed to the instructions given.

- Do not perform any work on the exhaust system while the heater is in operation.
- Before working on the exhaust system, first switch off the heater and wait until all parts have cooled completely. If necessary, wear suitable gloves.
- Do not inhale exhaust fumes.
- Do not operate the heater in enclosed spaces such as a boat shed or when the boat may have a cover fitted in winter etc.

Combustion air

The combustion air components supplied consist of a silencer, extension tube and a combustion air hull fitting (optional part).

The combustion air silencer and tube should be installed as shown below.

If combustion air is to be taken from an engine/ machinery space, please ensure it is adequately vented and that the area will not be pressurised or under partial vacuum when the engine is in use or ventilation fans are running.

If it is to be taken directly to an external hull fitting ensure that it is positioned with regard to the same conditions as required for the exhaust hull fitting.

Caution!

Safety instructions for the combustion air system!

- The position of the combustion air must not allow exhaust fumes or flammable vapour to be drawn in.
- If a combustion air hull fitting is used ensure water ingress is not possible at any time.
- The combustion air inlet must not be restricted or blocked at any time.
- The combustion air must not be drawn from any of the accommodation areas.
- The combustion air inlet must be drawn from a neutral pressure area.

Figure 7

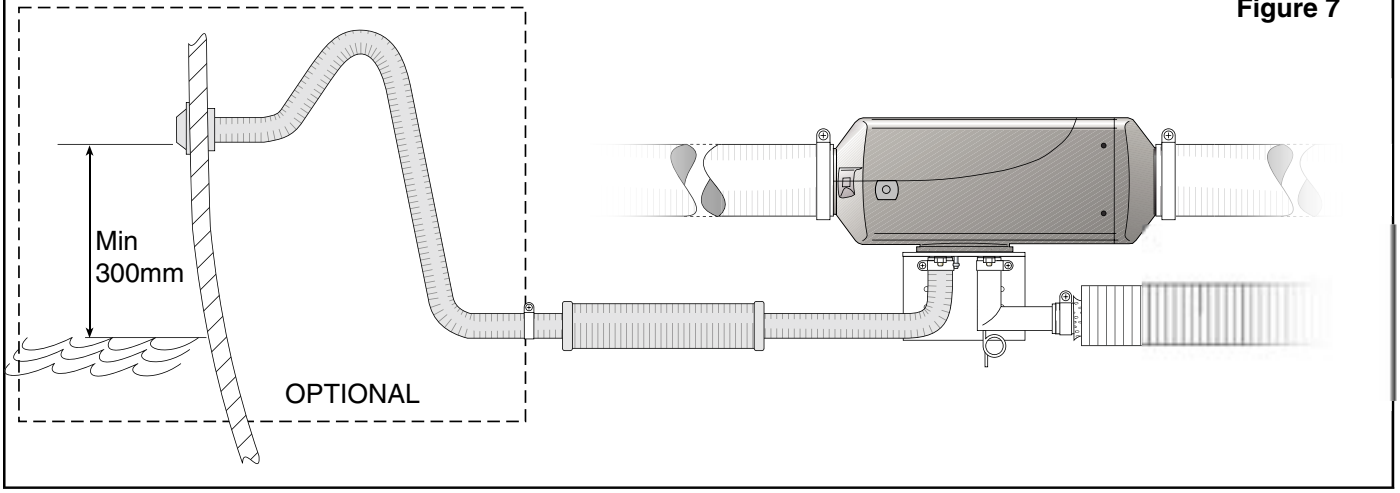

6 The fuel system

The fuel system supplied comprises of a fuel standpipe, a quantity of fuel line, shut-off valve, connectors and a fuel-metering pump.

The diagram illustrates a typical installation using a fuel standpipe, which is the preferred method for the fuel take off. This minimises any problems caused by over pressuring, fuel starvation and air leaks that can occur if connected to an engine fuel line.

However, fuel can be taken from an engine fuel line if it is approved by Eberspächer, and the engine/boat manufacturer (See technical description manual). Unapproved connection may affect the terms of your warranties.

Installing the standpipe

The fuel standpipe supplied must only be fitted to the top of the fuel tank and on an even surface. It must not be fitted to the side or bottom of the tank.

Install the standpipe as shown.

Figure 8

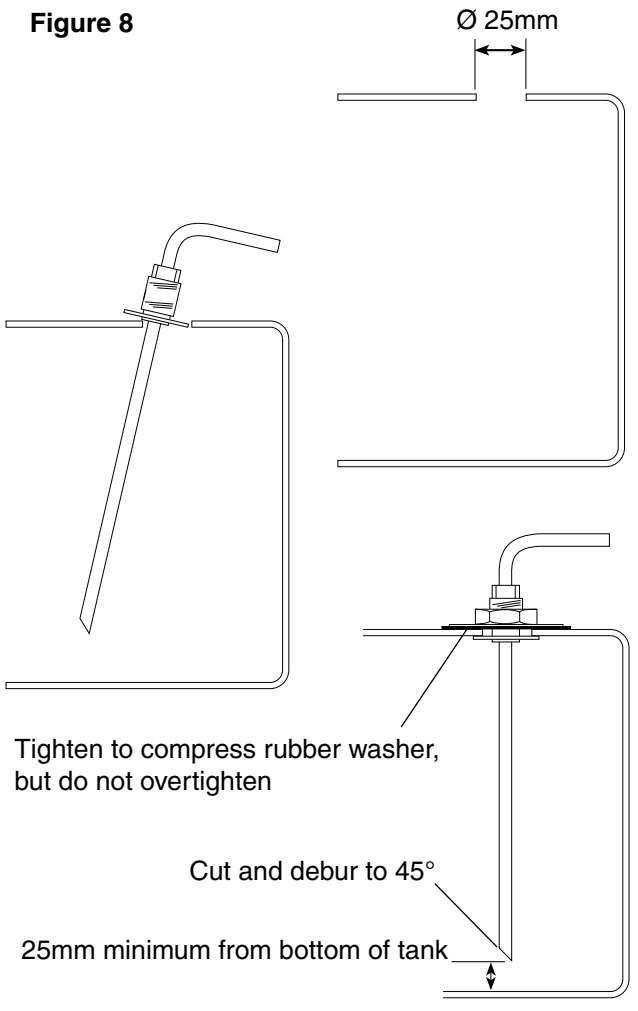

Positioning the fuel-metering pump

When installing the fuel-metering pump, take into consideration that it may be audible when in operation, so it should be installed into an area or onto surfaces that will not transmit the sound into the accommodation. The chosen area should also be free from excessive moisture and the fuel-metering pump must be mounted with the electrical connections/pressure side uppermost within the permissible angles shown.

Figure 9

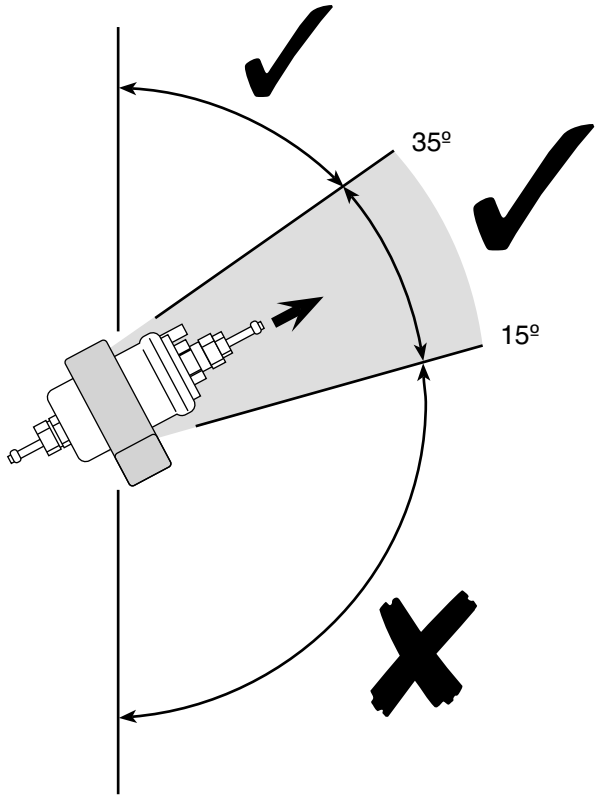

When connecting fuel pipes with a fuel hose always mount the fuel pipes in a butt joint to prevent any bubbles from forming.

Figure 10

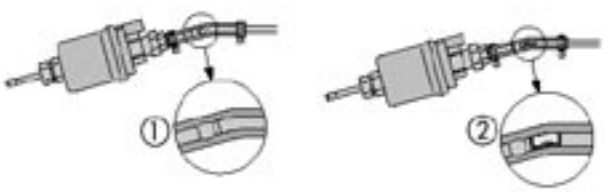

1 Correct connection.

2 Incorrect connection - bubble formation.

6 The fuel system

Caution!

Safety instructions for installing the fuel pipes!

- Only use a sharp blade to cut the plastic/rubber fuel hoses and pipes. Metal fuel pipes should be cut using an appropriate pipe cutter.
- Ensure all cuts are free from burrs and the fuel lines are not crushed or restricted.
- The fuel line from the fuel metering pump to the heater should be run to give a continuous rise.
- Fuel lines must be secured every 50cm to avoid noise and/or damage by vibration.
- Fuel lines must be protected from any mechanical damage.
- Avoid running the fuel lines where their condition and longevity may be affected by movement, vibration or heat.
- Do not secure the fuel lines to any exhaust system.
- Do not position any fuel connection where it could leak onto electrical connections or hot surfaces.
- Approval must be sought from any engine or boat manufacturer, before sharing an existing fuel feed.
- The fuel must not be conveyed by gravity or overpressure in the fuel tank.
- Withdrawal of fuel after the vehicles fuel pump is not allowed.

Danger!

Risk of fire, explosion, poisoning and injuries!

Caution when handling fuel, remember:

- Switch off engine/heater before refuelling or working on the fuel supply.
- No naked flames when handling fuel.
- Do not smoke.
- Do not inhale fumes.
- Avoid contact with skin.

Figure 11

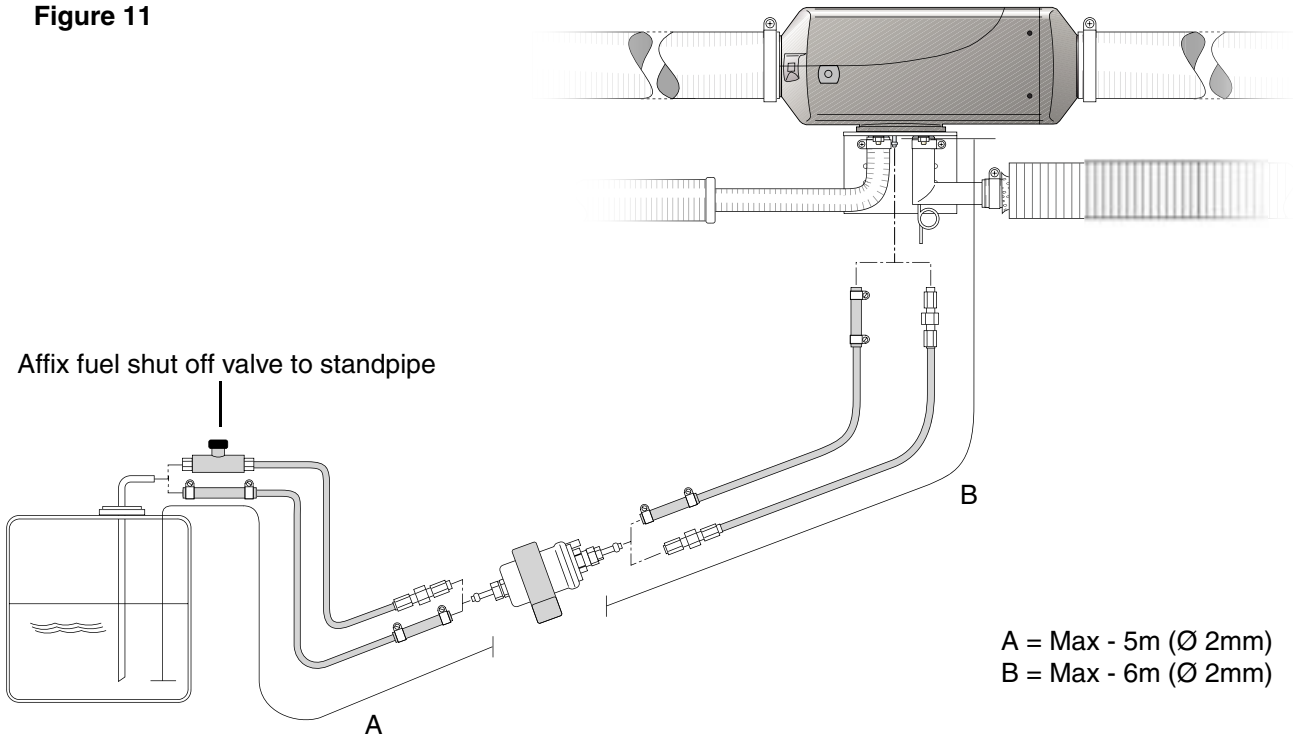

6 The fuel system

Fuel supply

Fuel quality for petrol heaters

The heater runs smoothly on standard commercial quality petrol in accordance with DIN EN 228, which you use to run your vehicle engine.

Fuel quality for diesel heaters

The heater runs smoothly on standard commercial quality diesel in accordance with DIN EN 590, which you use to run your vehicle engine.

Fuel for special cases

In special cases (above 0°C), the heater can also run on fuel oil EL or paraffin.

Fuel for low temperatures

Refineries and fuel service stations automatically adjust the fuel to normal winter temperatures (winter diesel). This means that difficulties are only to be expected for extreme drops in temperature, as also apply to the vehicle engine. Please also refer to the vehicle manual.

If the heater is run from a separate tank, please comply with the following rules:

For temperatures above 0°C, any kind of diesel fuel as per DIN EN 590 can be used.

If no special diesel fuel is available for low temperatures, then paraffin or petrol should be mixed with the fuel according to the following table:

Temperature	Winter diesel	Addition
0°C to –25°C	100%	——
–25°C to –40°C	50%*	50% paraffin or petrol

* or 100% special cold diesel fuel (Arctic diesel)

Please Note!

- Mixtures with used oil are not allowed.
- After refuelling with winter or cold diesel or the listed blends, the fuel pipes and the dosing pump must be filled with the new fuel by letting the heater run for 15 mins.

Operation with biodiesel (PME)

AIRTRONIC D2
The heater is **not** certified for operation with biodiesel. Biodiesel can be added to the fuel to up to 10%.

AIRTRONIC M D4
The heater is certified for operation with biodiesel as per DIN V 51606 in a free-flowing state up to -8°C.
Condition
Installation horizontally in normal position, with the exhaust connection downwards.

AIRTRONIC L D5
The heater is **not** approved for running on biodiesel according to DIN V 51606.

Please Note!

- When using 100% biodiesel, the heater should be operated twice a year with diesel fuel (in the middle and at the end of a heating period) to burn off any possible PME deposits.

  To do so, let the vehicle tank run almost empty and fill with diesel fuel without adding any biodiesel.

  While running on this tank filling, switch the heater on 2 to 3 times for 30 minutes at a time at the highest temperature setting.

- When operating with diesel/biodiesel mixtures of up to 50% biodiesel, intermediate operation with pure diesel fuel is not necessary.

7 Electrical System

The electrical system comprises of a heater cable harness and individual looms for the power supply, operating device and the fuel-metering pump. A fuse box assembly and the operating device you have selected are also included.

The three individual looms can be routed as one or in separate directions as required depending on the layout of the boat, the location of the batteries and fuel-metering pump, etc.

Positioning and connecting the operating device

The operating device should be located inside the boat in an area where it is easily visible and accessible. This is especially important if a timer, or where any other device with a programmable display, has been specified that may require regular attention.

Operating devices with integral temperature sensors and temperature sensor units should not be located where they can be adversely affected by direct sunlight or drafts. Additionally, locating the units near to boat fixtures such as cookers, or lighting that can emit heat, should be avoided.

A common position for the operating device is to locate it with other instrumentation on the boat, in an area such as the chart table/instrument panel. Additional information regarding fastening and operating instructions is supplied with the operating device.

Connecting to the power supply

The preferred point of connection is the boat's main battery isolator, using the fuse assembly supplied. It should be connected so that when the isolator is switched off, the heater cannot be used.

However, if a remote operating device such as a timer or Calltronic is to be used, then the heater will need to be wired to the battery (permanently live) side of the isolator so that when the isolator is switched off, the heater can still be operated.

Caution!

Connecting to a permanent supply!

- If a permanent supply is required, an additional isolator or circuit breaker may be needed, dependant on the legislation of the country.
- Check with the boat marina and your marine insurance policy to see if it is permissable for the heater to be operated when the boat is unattended.
- Ensure only the specified fuse ratings are used.

Caution!

Safety instructions for wiring the heater!

The heater is to be connected up electrically according to the EMC directives.

EMC can be affected if the heater is not connected up correctly. For this reason, comply with the following instructions:

- Ensure that the insulation of electrical cables is not damaged. Avoid: chafing, kinking, jamming or exposure to heat.
- In waterproof connectors, seal any connector chambers not in use with filler plugs to ensure they are dirt-proof and water-proof.
- Electrical connections and ground connections must be free of corrosion and firmly connected.
- Lubricate connections and ground connections outside the heater interior with contact grease.

Please Note!

Comply with the following when wiring the heater and the control element:

- Electrical leads, switchgear and controllers must be arranged in the vehicle so that they can function perfectly under normal operating conditions (e.g. heat exposure, moisture etc.).
- The following cable cross sections are to be used between the battery and heater. This ensures that the max. tolerable voltage loss in the cables does not exceed 0.5 V for 12 V or 1 V for 24 V rated voltage.

  Cable cross sections for a cable length of:
  – up to 5 m (plus cable + minus cable) = cable cross section 4 mm^2
  – from 5 to 8 m (plus cable + minus cable) = cable cross section 6 mm^2
- If the plus cable is to be connected to the fuse box (e.g. terminal 30), the vehicle cable from the battery to the fuse box must be included in rating the overall cable length and possibly re-dimensioned if necessary.
- Insulate unused cable ends.

Figure 12

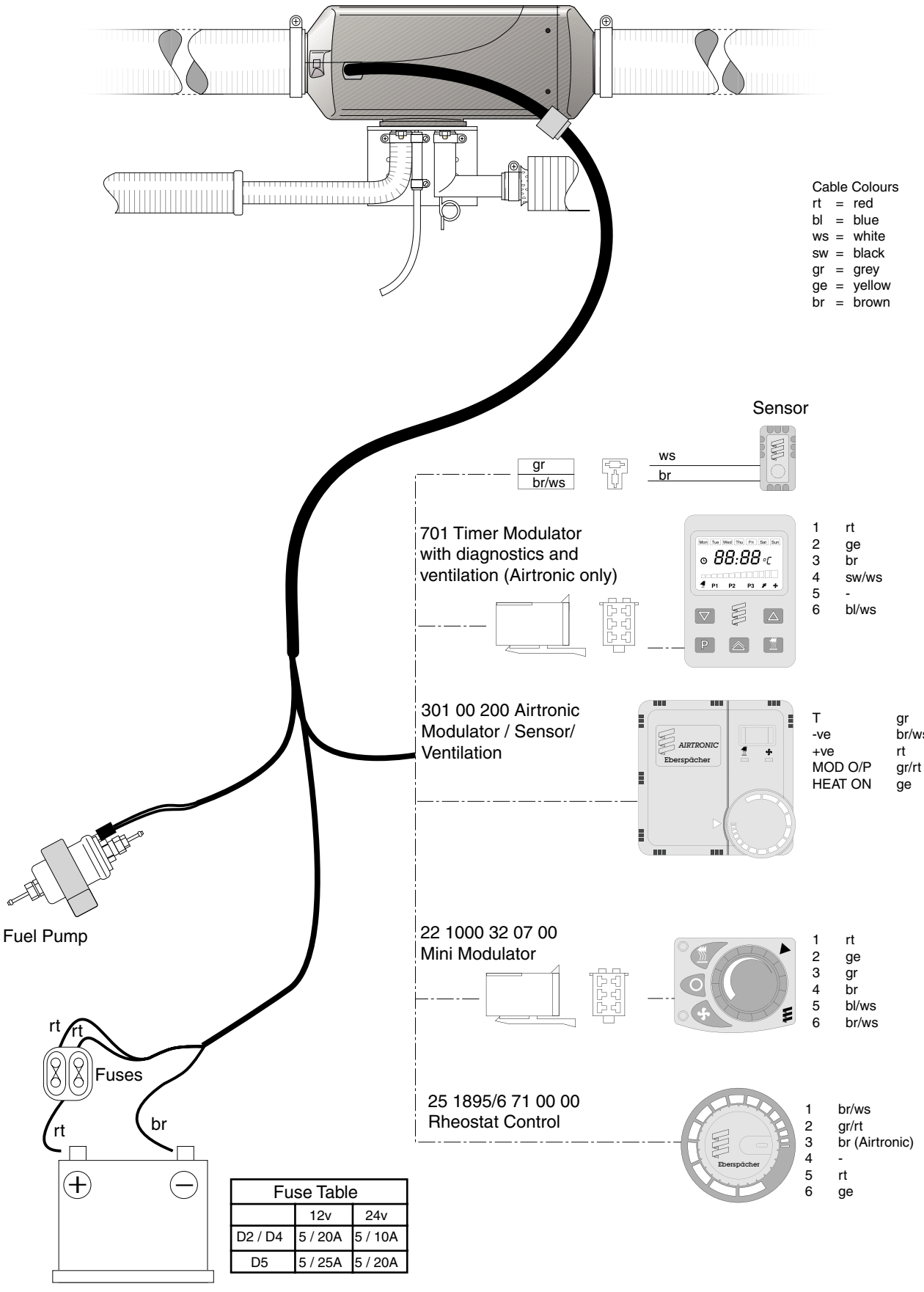

Fuse Table		
	12v	24v
D2 / D4	5 / 20A	5 / 10A
D5	5 / 25A	5 / 20A

8 Operation and function

Operating instructions

The heater is operated by a control unit.

The control unit is accompanied by detailed operating instructions which you will receive from the company installing the heater.

Please Note!

The control elements (e.g. mini timer, module timer) are accompanied by detailed operating instructions which you will receive from the company installing the heater.

Important instructions for operation

Safety checks before the start
After a longer interval in operations (after the summer months) the fuse must be put in position and/or the heater connected up to the battery. Check that all parts fit firmly (tighten screws where necessary).

Check the fuel system visually for any leaks.

Refer back to Technical Description and Operating Instructions for full operation and function of heater.

- Check that the batteries are fully charged.
- Check there is sufficient fuel in the fuel tank.
- Check the power supply for correct polarity.
- Ensure the operating device is set to its highest setting.
- Now switch on your heater.

Please Note!

Combustion may not be established when the heater is first operated. Several attempts may be required to start the heater. This is due to air being present in the heater's fuel lines, that needs to be purged by the fuel-metering pump.

Initial commissioning

The following points are to be checked by the company installing the heater during initial commissioning.

- After installation of the heater, the coolant circuit and the whole fuel supply system must be vented carefully. Comply with the instructions issued by the vehicle manufacturer.
- During the trial run of the heater, check all water and fuel connections for leaks and firm fitting.
- If the heater shows a fault during operation, find and eliminate the cause of the fault using a diagnosis unit.

9 Warranty information

Separate documents concerning warranty accompany the heater.

Eberspächer (UK) Ltd.
Headlands Business Park,
Salisbury Road, Ringwood
Hampshire, BH24 3PB

Tel: (01425) 480151
Fax: (01425) 480152

© Eberspächer (UK) Ltd. 2006
No part of this manual may be copied or reproduced in any form
without the express permission of Eberspächer (UK) Ltd.

This publication was correct at the time of going to print however,
Eberspächer (UK) Ltd have a policy of continuous improvement and reserve the right to
amend any specifications without prior notice.